REV	DESCRIPTION:	DATE
1.0		2/12/2007

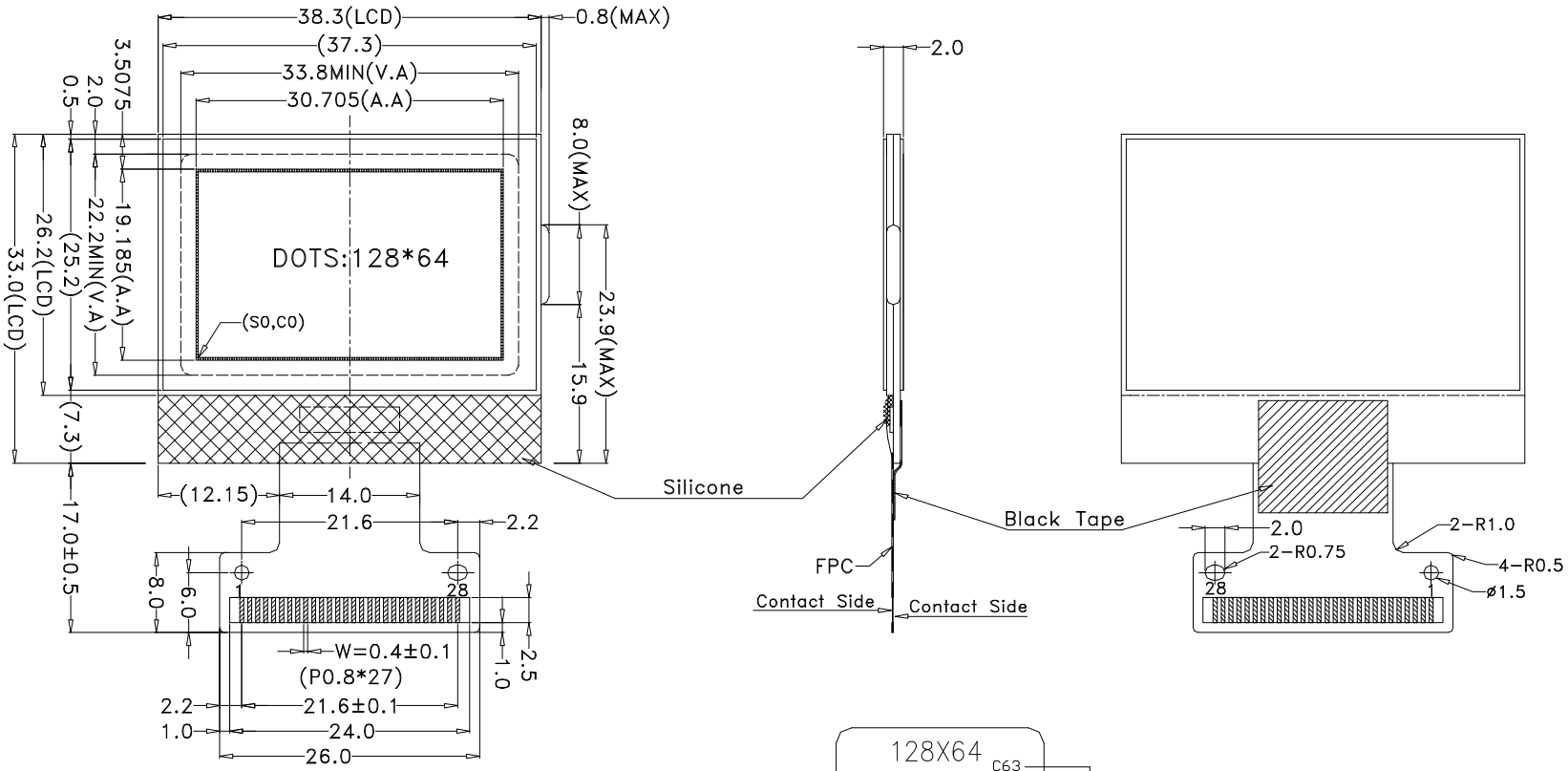

PIN ASSIGNMENT

1	VDD
2	C86
3	VSS
4	V0
5	V4
6	V3
7	V2
8	V1
9	C2-
10	C2+
11	C1+
12	C1-
13	C3+
14	VOUT
15	VSS
16	D7
17	D6
18	D5
19	D4
20	D3
21	D2
22	D1
23	D0
24	E /RD
25	RW /WR
26	RS
27	RESET
28	/CS1

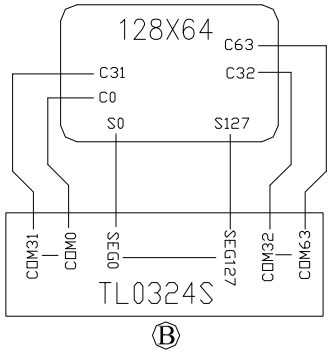

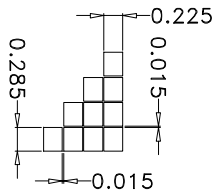

DOTS SIZE
SCALE:8/1

Display Type	TRANSFLECTIVE/FSTN POSITIVE
Display Resolution	DOTS: 128*64
Viewing Angle	6:00
Max.Ratio and Bias Level	1/65DUTY, 1/9BIAS
LCD Controller/Driver	TL0324S(COG) Ⓑ
Logic Voltage	3.0V
LCD Driving Voltage	TBD
Operation Temperature	0°C ~ 50°C
Storage Temperature	-10°C ~ 60°C

NHD-LGC-12864HZ-FN-FBS

Model Name:		Newhaven Display International, LLC		
GENERAL TOL: ± 0.2				
APPROVALS	DATE	DRAWN NO.	SCALE: 1:1	
DWN:				
CHK:		SIZE: A4	UNIT: mm	Page: 1-1
APP:				